900mm
3 drawer base cabinet

trendstyle
www.trendstyle.com.au

assembly instructions

equipment required

- **Cordless drill**
- **Drill bits:**
  No 2 screw tip, 4mm bit, No 12 countersinking bit
- **65mm wood screw**
- **Wall fixing** (only if fixing cabinet to wall)
- **Tape measure**
- **Adjustable square**
- **Spirit level**
- **Quick release clamps**
- **Pencil**
- **Safety gear:**
  Safety glasses, ear muffs, dust mask

important tips

- Plumbing and electrical work must be carried out by a licenced trades person.
- Assemble on a soft surface to ensure the cabinetry doesn't get scratched.
- Wear appropriate safety gear during assembly.
- To securely mount the cabinets on a stud wall, use at least 8-gauge screws that are 65mm in length. However, if your wall is made of concrete, brick, or a different material, consult with an expert to determine the appropriate fastening method.
- Remove any protective wrapping before getting started

included materials

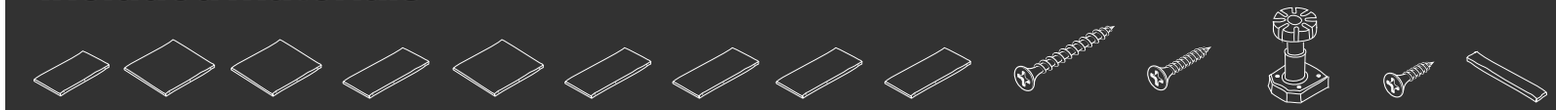

a	b	c	d	e	f	g	h	i	j	k	l	m	n
x2	x1	x1	x1	x1	x1	x1	x1	x1	x96	x36	x4	x4	x1
frame side panels	frame top panel	frame bottom panel	frame back panel	drawer bottom panel	drawer front panel	drawer back panel	drawer right side panel	drawer left side panel	50mm wood screws	28mm wood screws	adjustable legs	14mm wood screws	support rail

step 1 cabinet assembly

1

Attach the back panel **(d)** and bottom panel **(c)** using 50mm wood screws **(j)**.

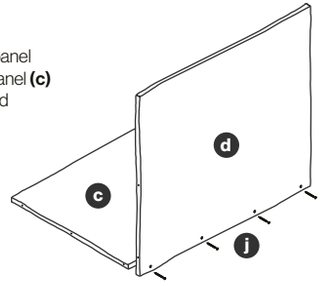

2

Attach the two side panels **(a)** to the back and bottom panels using 50mm wood screws **(j)**.

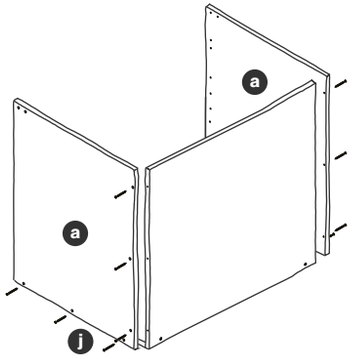

3

Attach the support rail **(n)** using 50mm wood screws **(g)**.

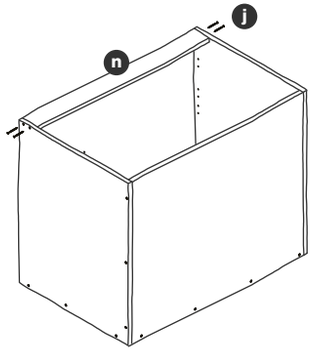

4

Locate the 4 groups of pre-drilled holes on the bottom panel & attach all adjustable leg plates **(i)** using 28mm wood screws **(h)**.

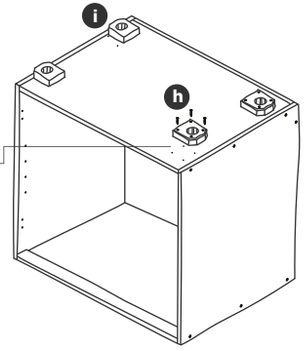

5

Attach both legs **(h)** to the plates and adjust the height of the legs to 145mm.

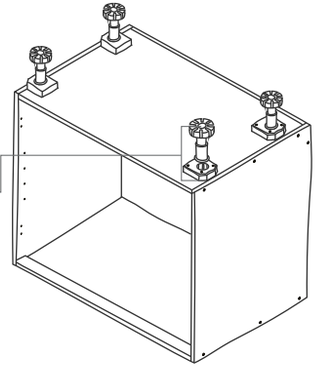

6

2 drawer cabinet frame is now complete. Follow the next steps to assemble the drawers.

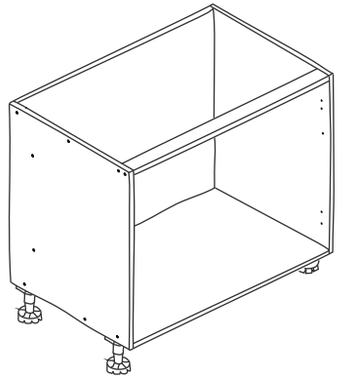

step 2 drawer assembly

1

Attach the bottom panel **(e)** to the front **(f)** and back panels **(g)** using 50mm wood screws **(g)**.

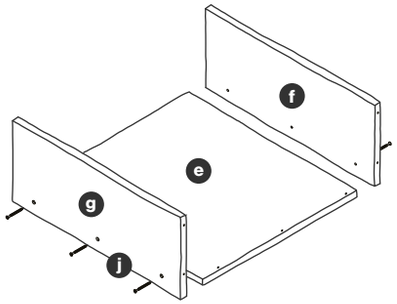

2

Attach the right **(h)** and left panels **(i)** using 50mm wood screws **(j)**.

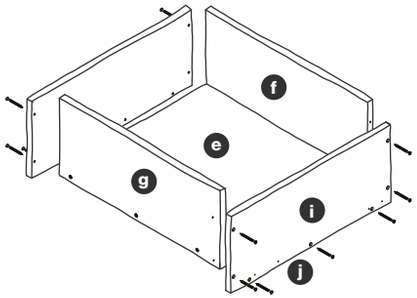

3

Drawer is now complete.

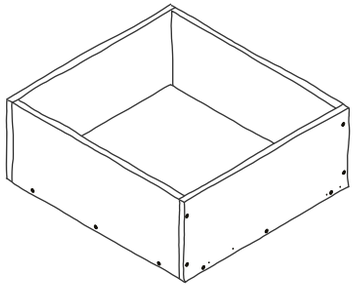

step 3 joining the cabinets

1

Check your cabinets are level.

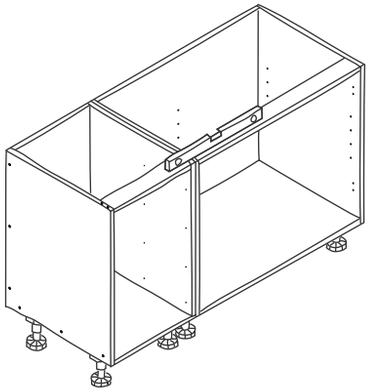

2

Clamp cabinets using quick release clamps. Once secured, pre-drill screw holes.

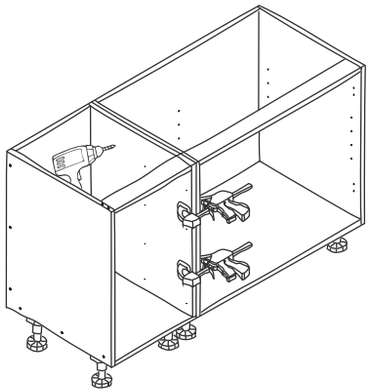

3

Attach the cabinets together using using 28mm wood screws **(e)**.

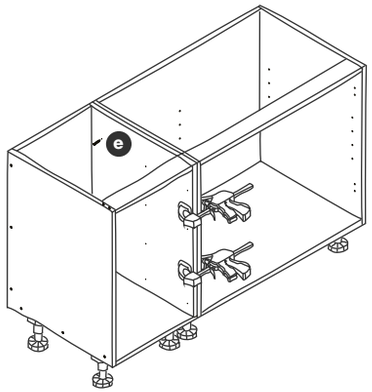

step 4 attaching drawer runners

1

Release the drawer guide from the runner by pulling or pushing the black tab.

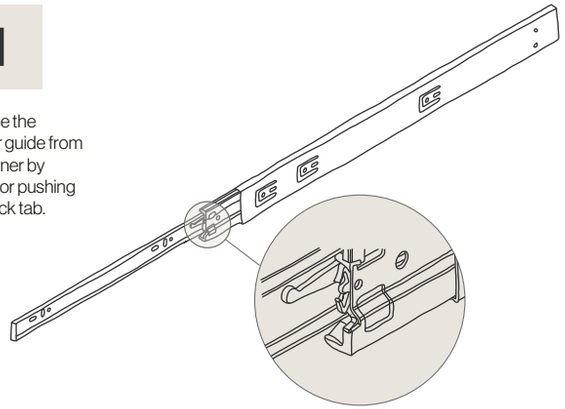

2

Install runner guide to the right and left hand drawer panels using 14mm wood screws **(m)**, inserted into pre-drilled holes.

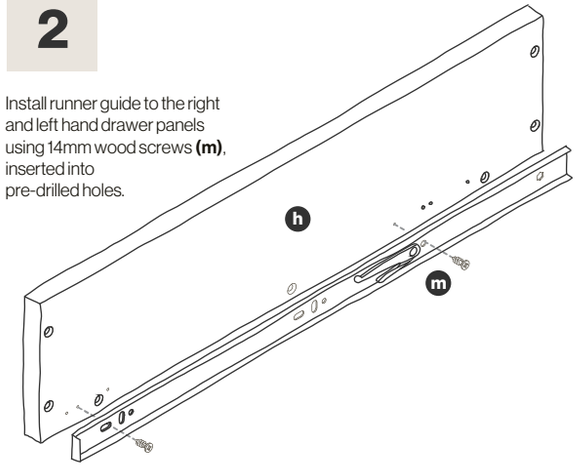

3

Attach runners to cabinet drawer frame side panels using 14mm wood screws **(m)** inserted into pre-drilled holes.

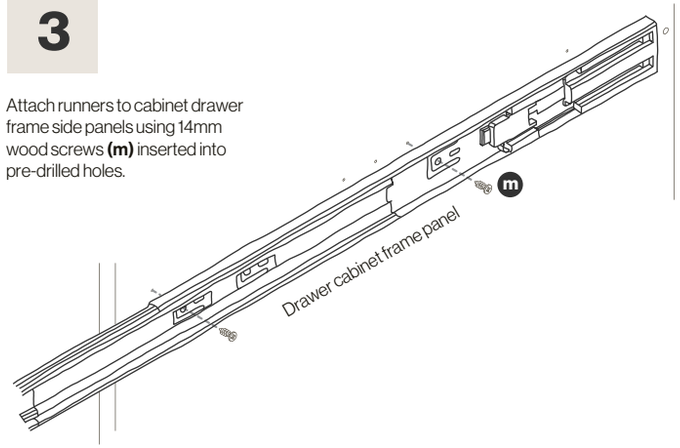

step 5 attaching drawer panels

profiles

country profile

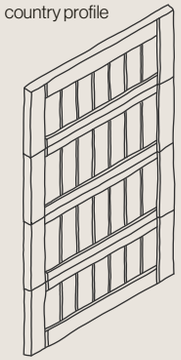

alpine profile

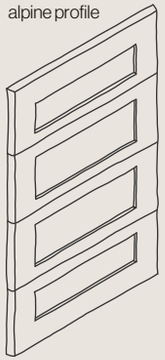

1

Align the bottom drawer panel flush with the bottom of the cabinet base and ensure it aligns with the sides of the cabinet. Secure it in place by clamping. Pre-drill and attach using 28mm screws **(k)**.

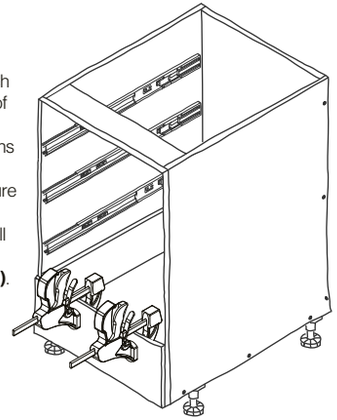

2

Ensure that the adjacent drawers are flush on both sides and maintain consistent spacing between them.

Repeat for the next drawer.

Tip: Use a consistent spacer measurement between the drawers. 2 x $1 coins are ideal.

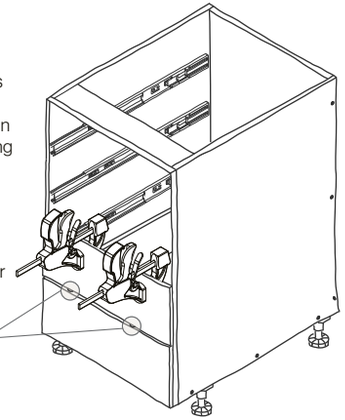

3
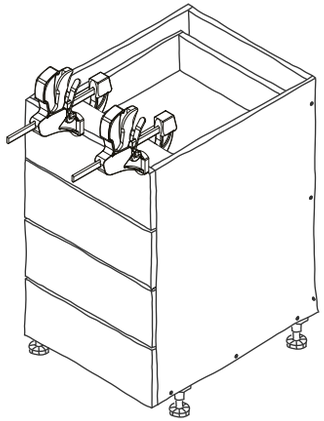
For the top drawer, securely fasten the drawer front onto the cabinet support rail using the quick release clamp.