800mm
slimline cabinet

trendstyle
www.trendstyle.com.au

assembly instructions

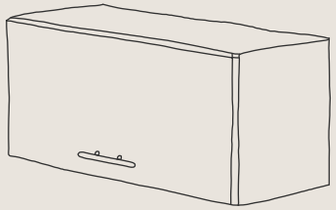

included materials

a x2	b x1	c x1	d x1	e x20	f x8	g x1	h x2	i x22	j x1	k x1	l x12	m x2
side panels	top panel	bottom panel	back panel	50mm wood screws	28mm wood screws	cabinet door	hinges	14mm wood screws	gas strut	set of strut brackets	stick on end caps	door buffer

equipment required

- **Cordless drill**
- **Drill bits:**
  No 2 screw tip, 4mm bit, No 12 countersinking bit
- **65mm wood screw**
- **Wall fixing** (only if fixing cabinet to wall)
- **Tape measure**
- **Adjustable square**
- **Spirit level**
- **Quick release clamps**
- **Cabinet supports**
- **Pencil**
- **Safety gear:**
  Safety glasses, ear muffs, dust mask

important tips

- Plumbing and electrical work must be carried out by a licenced trades person.
- Assemble on a soft surface to ensure the cabinetry doesn't get scratched.
- Wear appropriate safety gear during assembly.
- To securely mount the cabinets on a stud wall, use at least 8-gauge screws that are 65mm in length. However, if your wall is made of concrete, brick, or a different material, consult with an expert to determine the appropriate fastening method.
- Remove any protective wrapping before getting started

step 1 cabinet assembly

1

Attach the top panel **(b)** and back panel **(d)** and bottom panel **(c)** using 50mm wood screws **(e)**.

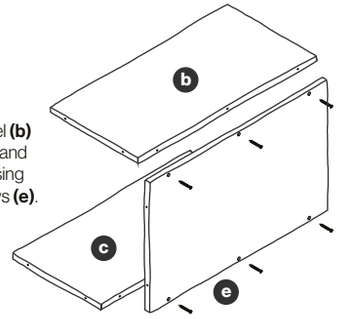

2

Attach the two side panels **(a)** to the back, top and bottom panels using 50mm wood screws **(e)**.

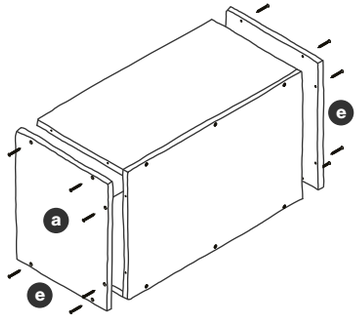

3

Once all sides have been attached, the shell of your cabinet is complete.

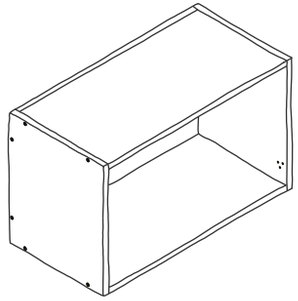

step 2 joining the cabinets and securing to the wall

1

Using cabinet supports, align the cabinets and hold together using quick release clamps.

Ensure the cabinets are level.

Tip: It may be best to align the top of the cabinets with the top of your pantry.

Note: AUS/NZ standards requires a minimum distance of 600mm between burners and the rangehood.

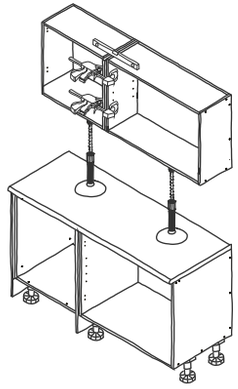

2

Check again that all of your cabinets are level. If you have a plasterboard wall, attach cabinets using timber screws that are at least 65mm in length. Ensure each screw is inserted through a timber stud.

If your walls are made of another material eg. brick, concrete, steel etc, obtain professional advice on the best way to safely attach your cabinets.

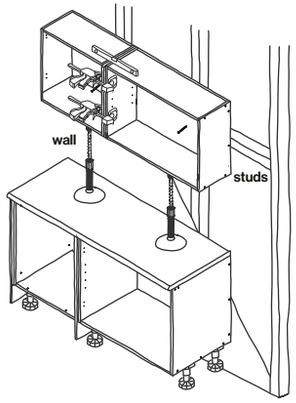

step 2 joining the cabinets *continued*

3

Ensure the timber support rail is leven and install 360mm from the pantry top.

Tip: For ease of installation, ask another person to help hold the cabinet.

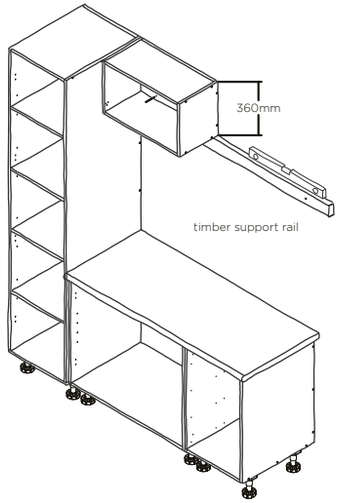

4

This slimline cabinet can be used in conjuction with pantry end panels as an overhead refrigerator cabinet.

a. Ensure the cabinet is in alignment with the top of the end panels.
b. Set the cabinet back from the front of the end panels. 18mm for melamine doors and 20mm for thermoformed doors.
c. Clamp the panels and cabinet together using quick release clamps.
d. Pre-drill holes, and attach the cabinet and end panels using wood screws.

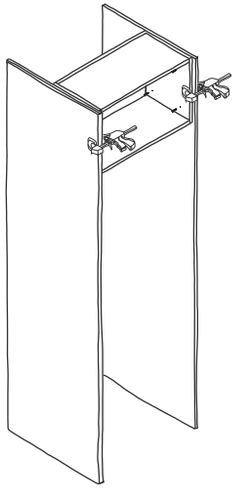

step 4 attaching the door

1

Push on the release tab to remove the hinge from the hinge plate **(h)**.

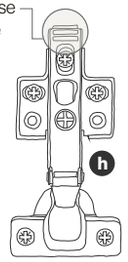

2

Attach the hinge plate to the underside of the top of the cabinet, securing with 14mm wood screws **(i)** ensuring they are screwed through the lugs.

Once the hinge has been adjusted, secure 2 more screws in the round holes in each plate.

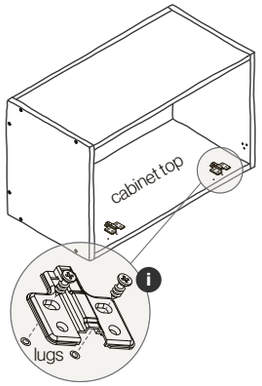

step 4 attaching the door

3

Attach the two hinges **(h)** to the door using 14mm wood screws **(i)**.

Ensure that the screws are inserted through the lugs.

Once the hinge has been adjusted, secure 2 more screws in the round holes in each plate.

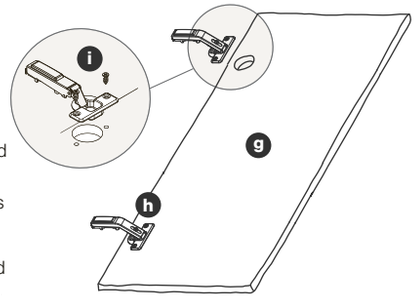

4

Attach the door and cabinet by clipping the hinges **(h)** together.

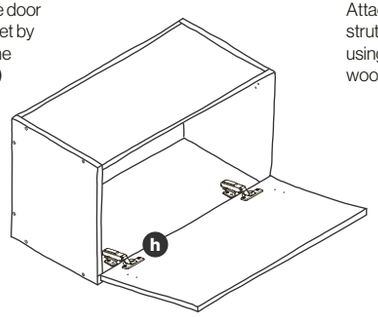

5

Attach both gas strut brackets **(k)** using 14mm wood screws.

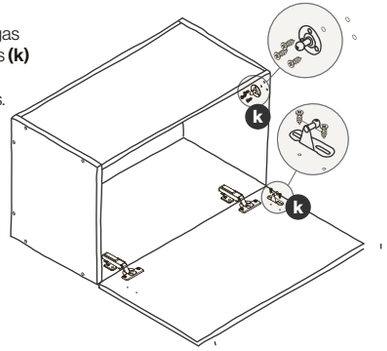

6

Clip the gas strut **(j)** onto to the two brackets.

Note: If the strut needs adjusting, move the bracket on the door forward or back.
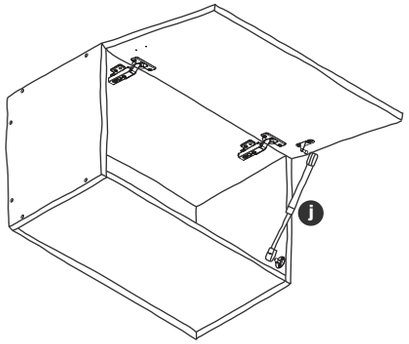
Note: If you need to remove the gas strut, use a flat head screw driver to lift the metal straps on the strut.