trendstyle

www.trendstyle.com.au

200mm base cabinet

assembly instructions

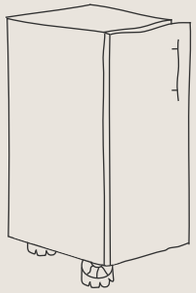

equipment required

- **Cordless drill**
- **Drill bits:**
  No 2 screw tip, 4mm bit, No 12 countersinking bit
- **65mm wood screw**
- **Wall fixing** (only if fixing cabinet to wall)
- **Tape measure**
- **Adjustable square**
- **Spirit level**
- **Quick release clamps**
- **Pencil**
- **Safety gear:**
  Safety glasses, ear muffs, dust mask

important tips

- Plumbing and electrical work must be carried out by a licenced trades person.
- Assemble on a soft surface to ensure the cabinetry doesn't get scratched.
- Wear appropriate safety gear during assembly.
- To securely mount the cabinets on a stud wall, use at least 8-gauge screws that are 65mm in length. However, if your wall is made of concrete, brick, or a different material, consult with an expert to determine the appropriate fastening method.
- Remove any protective wrapping before getting started

included materials

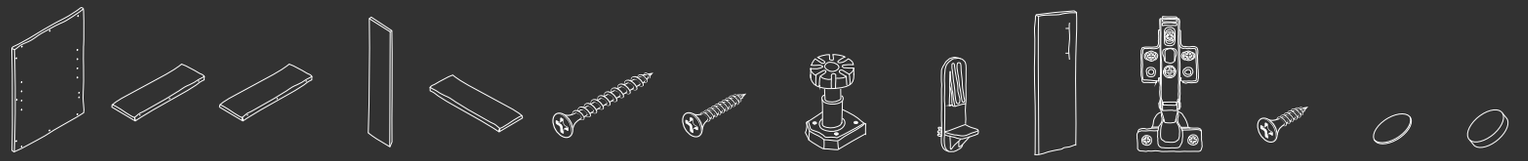

a x2	b x1	c x1	d x1	e x1	f x19	g x15	h x2	i x4	j x1	k x2	l x12	m x6	n x2
side panels	top panel	bottom panel	back panel	adjustable shelf	50mm wood screws	28mm wood screws	adjustable legs	plastic shelf supports	cabinet door	hinges	14mm wood screws	stick on end caps	door buffer

step 1 cabinet assembly

1

Attach the top panel **(b)** and bottom panel **(c)** to one of the side panels **(a)** using 50mm wood screws **(f)**.

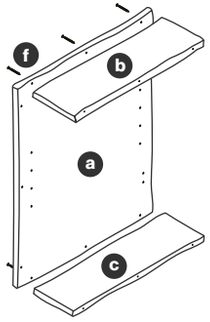

2

Attach the remaining side panel **(a)** to the top and bottom panels using 50mm wood screws **(f)**.

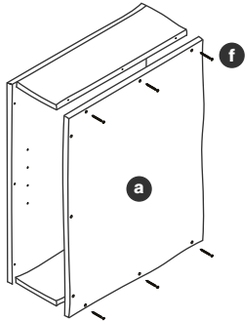

3

Attach the back panel **(d)** using 50mm wood screws **(f)**.

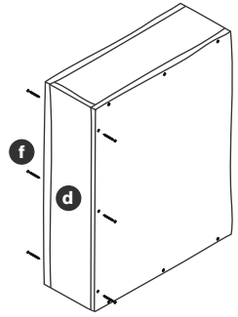

4

Locate the 2 groups of pre-drilled holes on the bottom panel & attach both adjustable leg plates **(h)** using 28mm wood screws **(g)**.

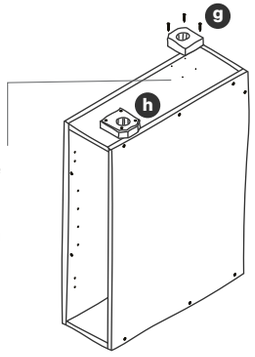

5

Attach both legs **(h)** to the plates and adjust the height of the legs to 145mm.

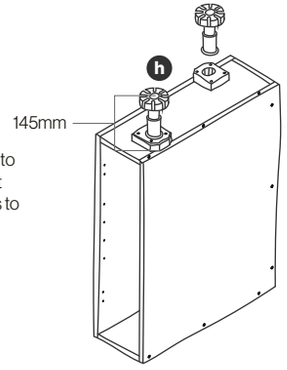

6

a. Turn your cabinet upright and insert the 4 plastic shelf supports **(i)** at your desired shelf height.

b. Slide the shelf **(e)** into position, resting on the supports.

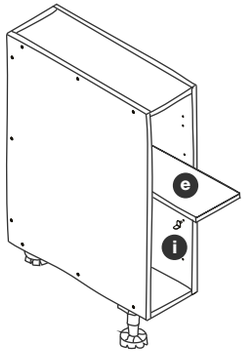

step 2 joining the cabinets

1

Check your cabinets are level.

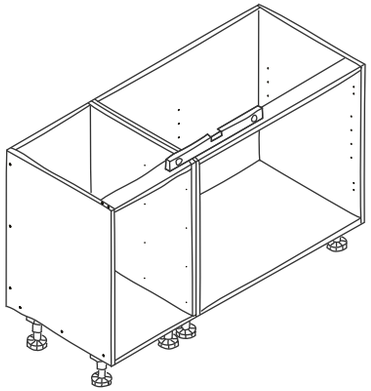

2

Clamp cabinets using quick release clamps. Once secured, pre-drill screw holes.

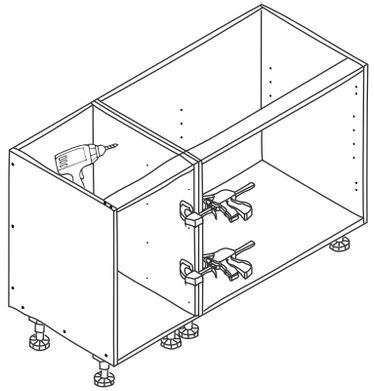

3

Attach the cabinets together using using 28mm wood screws **(g)**.

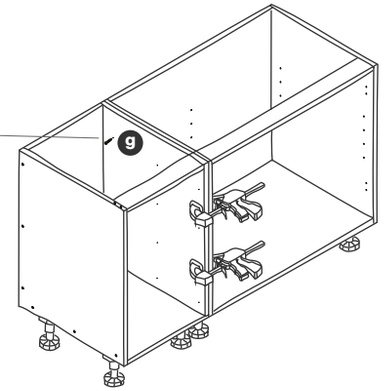

step 3 securing cabinets to wall

1

Check again that all of your cabinets are level. If you have a plasterboard wall, attach cabinets using timber screws that are at least 65mm in length. Ensure each screw is inserted through a timber stud.

If your walls are made of another material eg. brick, concrete, steel etc, obtain professional advice on the best way to safely attach your cabinets.

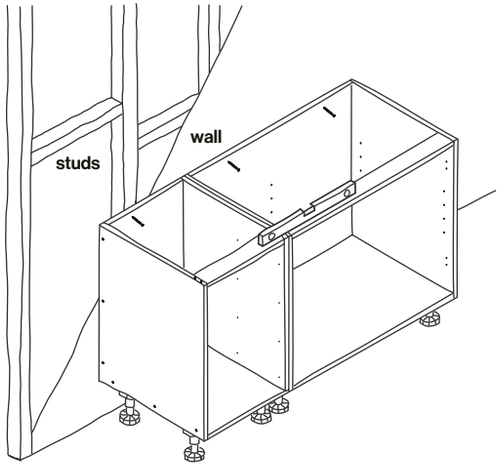

step 4 attaching the door

1

a. Clip the hinge plates onto the door panel

b. Push down to clip hinge together securely
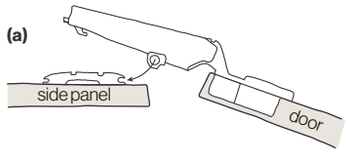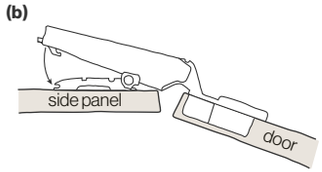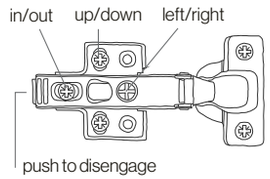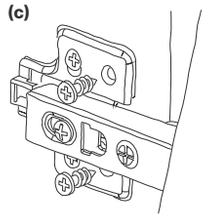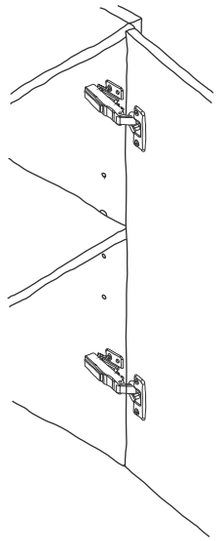
c. Adjust the screws to align the doors and add extra screws once door is positioned correctly.